ISSN 2395-1621

A Review on Evaluation and comparison of the performance of domestic refrigerator by using different refrigerants

#1Mr. Deepak J More, #2Prof. Avinash M Patil

1deepakmore126@gmail.com
2patilavi.karnal@gmail.com

#1M.E.Student, Dept. of Mechanical Engg.
PVPIT,Budhagaon, India

#2Assosiate Professor, Dept. of Mechanical Engg.,
PVPIT, Budhagaon, India.

ABSTRACT

The refrigeration is the process of removal of heat from the system under controlled conditions. This review paper represents the recent developments done in domestic refrigerator.Performance ofrefrigerator is increased by using different refrigerants. R134a (Hydro fluorocarbon refrigerant) is used in domestic refrigeration and other vapour compression system. R134a is having zero ozone depletion potential (ODP) and almost good thermodynamic properties, but it has a high Global Warming Potential (GWP) of 1300.Therefore it is going to be banned very soon for environmental safety. Some new refrigerants is been found by researchers which are environmental friendly refrigerants having low GWP and low ODP. Hydrocarbon particularly propane, butane and isobutene are proposed as an environment benign refrigerant.This paper investigated an ozone friendly, energyefficient, user friendly, safe and cost-effectivealternative refrigerant for HFC134a in domesticrefrigeration systems.

Keyword:**Hydro fluorocarbon refrigerant, GWP, ODP, Environmental friendly refrigerants**

ARTICLE INFO

Article History :

Received:2nd November 2015

Received in revised form:

4th November 2015

Accepted : 5th November 2015

I. INTRODUCTION

A) Vapor Compression Cycle:

Refrigerator is one of the home appliance utilizing mechanical vapour compression cycle in it process.The Vapor Compression Refrigeration Cycle is a process that cools an enclosed space to a temperature lower than the surroundings. To accomplish this, heat must be removed from the enclosed space and dissipated into the surroundings. However, heat tends to flow from an area of high temperature to that of a lower temperature. During the cycle refrigerant circulates continuously through four stages. The first stage is called Evaporation and it is here that the refrigerant cools the enclosed space by absorbing heat. Next, during the Compression stage, the pressure of the refrigerant is increased, which raises the temperature above that of the surroundings. As this hot refrigerant moves through the next stage, Condensation, the natural direction of heat flow allows the release of energy into the surrounding air. Finally, during the Expansion phase, the refrigerant temperature is lowered by what is called the auto refrigeration effect. This cold refrigerant then begins The Evaporation stage again, removing more heat from the enclosed space.Figure (a) shows an ideal single-stage vapor compression cycle in which compression occurs inthe superheated region.

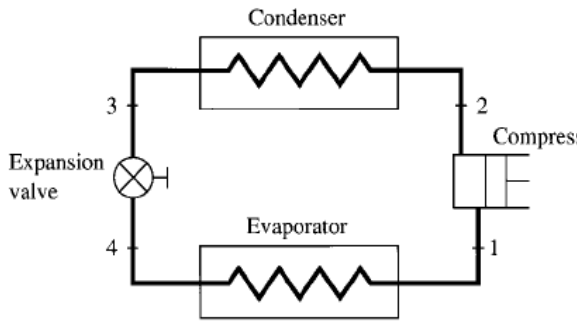

(a)

B) Processes:

Figure 9.5 (b) shows the refrigeration cycle on p-h and T-s diagrams. The refrigerant evaporatesentirely in the evaporator and produces the refrigerating effect. It is then extracted by the compressorat state point 1, compressor suction, and is compressed isentropically from state point 1 to 2. Itis next condensed to liquid in the condenser, and the latent heat of condensation is rejected to theheat sink. The liquid refrigerant, at state point 3, flows through an expansion valve, which reduces itto the evaporating pressure. In the ideal vapor compression cycle, the throttling process at the expansionvalve is the only irreversible process, usually indicated by a dotted line. Some of the liquidflashes into vapor and enters the evaporator at state point 4. The remaining liquid portion evaporatesat the evaporating temperature, thus completing the cycle.

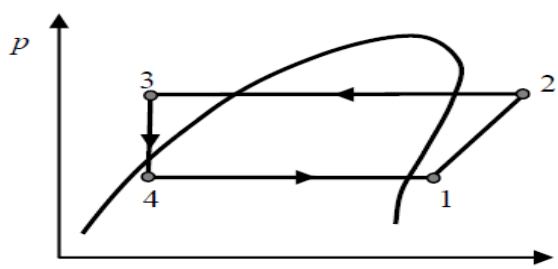

(b)

The refrigeration process that employed in the domestic refrigerator is based on avapour compression cycle as shown in Figure 2 and collaborated with Figure 1. There are three main parameter that were considered in this study; compressor power, refrigeration capacity and coefficient of performance (COP).

Process line from 1 to 2 represents compressor power. Compressor power is defined as the power needed to do the compression process in watt.

$$P = m\,(h_2 - h_1) \qquad .... (1)$$

Process from point 2 to 3 represents heat rejection through condenser.

$$Q_{in} = m\,(h_1 - h_4) \qquad .... (2)$$

The coefficient of performance (COP) is a measure of efficiency of the refrigerator. The COP of a domestic refrigerator is the ratio of the refrigeration capacity to the energy supplied to the compressor.

$$\mathrm{COP} = \frac{\dot{Q}_{in}}{P} = \frac{\dot{m}(h_1 - h_4)}{\dot{m}(h_2 - h_1)} \qquad ..... (1\&2)$$

C) Refrigerant:

The working fluid used to transfer the heat from low temperature reservoir to high temperature reservoir is called
refrigerant.There are different types of refrigerant which are described as followings.

CFC: They are molecules composed of carbon, chlorine and fluorine. It contributes to the destruction of the ozone layer. These are R11, R12, R113, R500, R502 etc.

HCFC: They are molecules composed of carbon, chlorine, fluorine and hydrogen. They are less stable than CFCs, destroy ozone and to a lesser extent. These are R22, R123, R124, R401a etc.

HFC: They are molecules composed of carbon, fluorine and hydrogen. They do not contain chlorine and therefore do not participate in the destruction of the ozone layer.But it has a high Global Warming Potential (GWP)
Hydrocarbons (HC): This is primarily propane (R290), butane (R600) and isobutene (R600a). These fluids have good thermodynamic properties, but are dangerous because of their flammability.

Table 1 Properties of some refrigerants.

Refrigerant	Molecular Weight	Normal boiling point, C	Liquid density (kg/m3)	Critical temperature, C	Critical pressure, MPa	Vap (kJ/kg)
R134a	102.0	-26	122525.3	101.1	4.06	216.87
R290	44.0	-42	500.1	96.7	4.25	423.33
R600a	58.1	-12	556.9	134.7	3.64	364.25

II. LITERATURE REVIEW

Dongsoo et al [1] presented the performance of a propane/isobutane (R290/R600a) mixture was examined for domestic refrigerators. The experimental results obtained with the same compressor indicated that the propane/isobutane mixture at 0.6 mass fraction of propane has a 3±4% higher energy efficiency and a some-what faster cooling rate than CFC12.

Sattar et al. [2] in the present work experimental investigation on the performance of a domestic refrigerator using pure isobutane and mixture of propane, butane and isobutene as a refrigerant. The refrigeration capacity, the compressor power, the coefficient of performance(COP), condenser duty and heat rejection ratio were investigated

Mohanraj et al. [3] in the present work, an experimental investigation has been made with hydrocarbon refrigerant mixture (composed of R290 and R600a in the ratio of 45.2:54.8 by weight) as an alternative to R134a in a 200 l single evaporator domestic refrigerator. The results showed that the hydrocarbon mixture has lower values of energy consumption; pull down time and ON time ratio by about 11.1%, 11.6% and 13.2%, respectively, with 3.25–3.6% higher coefficient of performance (COP).

Tiwari et al. [4] had discussed the developments in the domestic refrigerator in his paper. By using different refrigerants the COP of the system was observed. Eco friendly refrigerants like R-404a, R-407c, R-410a, R-152a were developed which provides almost same performance as R-12, and R-134a.

Austin et al. [5] had presented the study on refrigerator using mixed refrigerant Mixed Refrigerant (hydrocarbons mixtures propane, and isobutane) and compared with the performance of refrigerator when R-134a was used as refrigerant. The effect of condenser temperature and evaporator temperature on COP, refrigerating effect was investigated. Hence the energy consumption of the refrigerator during experiment with mixed refrigerant and R-134a was measured.

Rasti et al. [6] devoted his work to feasibility study of substitution of two hydrocarbon refrigerants instead of R134a in a domestic refrigerator. The effect of parameters including refrigerant type, refrigerant charge and compressor type are investigated. This research is conducted using R436A (mixture of 46% iso-butane and 54% propane) and R600a (pure iso-butane) as hydrocarbon refrigerants, HFC type compressor (designed for R134a) and HCtype compressor (designed for R600a).

Chavhan et al. [7] have presented the study on refrigerator using R134a R134a is having zero ozone depletion potential (ODP) and almost same thermodynamic properties as R12, but it has a high Global Warming Potential (GWP) of 1300.Hence an alternative for this refrigerant is to be identified. Paper reviews the performance of different environmental friendly refrigerants and their mixtures in different proportions and also observed the effect of working parameters like dimensions of capillary tube, working pressures and working temperatures, which affect the coefficient of performance (COP) of vapour compression refrigeration system.

Gurumurthy et al.[8] had discussed on experimental studies carried out for the performance evaluations of a domestic refrigerator when four ratios of hydrocarbon, propane, butane and isobutene are used as possible alternative replacements to the traditional, R-12 refrigerant. The uses of proposed alternative refrigerants have the advantages such as (i) availability in local places, (ii) cheapness, and (iii) of an environmentally friendly nature. An unmodified R – 12 domestic refrigerators and air conditioners were charged and tested with each of the four hydrocarbon mixtures containing.

B.o.bolajiet al.[9]provided comparative experimental steady is carried out of there refrigerator R-152a R-32 & R-134a to replace R-134a R-152a & R-32 are new refrigerant having zero ODP & GWP finally, he considered that Cop of R-152a 4.7% higher than R-134a & Cop of R-32 is 8.5% less than R- 134a. Pull down time is achieved early than R-32. Power is considerably reduced with R-152a than the R-32 R-134a.

K. Mani et al.[9], have analyzed a vapour compression refrigeration system with the new R290/R600a refrigerant mixture as drop-in replacement was conducted and compared with R12 and R134a. The VCRS was initially designed to operate with R12.The results showed that the refrigerant R134a showed slightly lower COP than R12. The discharge temperature and discharge pressure of the R290/R600a mixture was very close to R12. The R290/R600a (68/32 by wt %) mixture can be considered as a drop-in replacement refrigerant for R12 and R134a.

III. CONCLUSION

Researchers have carried out experimental investigations to find out the various factors affecting the performance of vapour compression refrigeration system. The following results were observed.

1) From the above literature survey it is found that, the several refrigerants are expelled due to their environmental impact, are expected to be replaced. Replacing them is a difficult task.
2) Many researcher studies on different types of refrigerant used to improve performance of domestic refrigerator.
3) Few researchers have reported on combination of different insulating material with different refrigerants in refrigeration system. Hence it is clear that there is wide scope to do the research in the study on different types of refrigerants and insulating material used to improve performance of domestic refrigerator.

IV. NOMENCLATURE

Symbol	Meaning
COP	Coefficient of performance
GWP	Global warming potential
ODP	Ozone depletion potential
GHG	Green house gas
TEWI	Total equivalent warming impact
CFC	Chlorofluorocarbon
HCFC	Hydro Chlorofluorocarbon
HFC	Hydrofluorocarbon
R11	Trichlorofluoromethane
R12	Dichlorodifluoromethane
R22	Monochlorodifluoromethane
R32	Methylene Fluoride
R125	Pentafluoroethane
R134a	Tetrafluoroethane
R152a	Difluoroethane
R290	Propane
R407c	23% of R32, 25% of R125 and 52% of R134a
R410a	50% of R32 and 50% of R125
R600	Butane
P	Compressor power
Q_{in}	Heat rejected

REFERENCES

[1]Dongsoo Jung, Kim, Kilhong, " Testing of propane/isobutane mixture in domestic Refrigerators", International Journal of Refrigeration 23 (2000) 517-527.

[2] GurumurthyVijayanIyer, "Experimental Investigations on Eco-Friendly Refrigeration andAir Conditioning Systems" Proceedings of the 4th WSEAS International Conference onFluid Mechanics and Aerodynamics, Elounda, Greece, (August 21-23, 2006), 445-450.

[3] Sattar MA, Saidur R, and Masjuki H.H, "Experimental Investigation on the Performance ofDomestic Refrigerator Using Isobutane and Mixture of Propane, Butane and Isobutene" 1st International Conference of the IET Brunei Darussalam Network, (26-27 May 2008)1-10.

[4] M. Mohanraj, S. Jayaraj, "Experimental investigation of R290/R600a mixture as an alternative to R134a in a domestic refrigerator", International Journal of Thermal Sciences 48 (2009) 1036–1042.

[5] AbhishekTiwari, R.C.Gupta, " Recent Development On Domestic Refrigerator", International Journal of Engineering Science and Technology (IJEST) ISSN : 0975-5462 Vol. 3 No. (5 May 2011),4233-4239.

[6]N.Austin, Dr.P.SenthilKumar,N.Kanthavelkumaran, "Thermodynamic Optimization of Household Refrigerator Using Propane –Butane as Mixed Refrigerant", International Journal of Engineering Research and Applications (IJERA) ISSN: 2248-9622 Vol. 2, Issue 6, (November-December 2012), 268-271.

[7] Mehdi Rasti, Aghamiri, Mohammad-Sadegh, " Energy efficiency enhancement of aDomestic refrigerator using R436A and R600a as alternative refrigerants to R134a",International Journal of Thermal Sciences 74 (2013) 86-94.

[8] SandipP.Chavhan, Prof.S.D.Mahajan, "A Review of anAlternative to R134aRefrigerant in Domestic Refrigerator", International Journal of Emerging Technology andAdvanced Engineering (ISSN 2250-2459, ISO 9001:2008 Certified Journal, Volume 3, Issue 9), (September2013) 550-556.

[9] B.O.Bolaji, University of agriculture, Nigeria."Exergetic performance of a domestic refrigerator using R-12 and its alternative refrigerants", Journal of Engineering Science and Technology Vol. 5, No. 4 (2010) 435 - 446 © School of Engineering, Taylor's University.

[10] K. Mani, and V. Selladurai, ―"Experimental analysis of a new refrigerant mixture as drop-in replacement for CFC12 and HFC134a" International Journal of Thermal Sciences 47, 2008. pp. 1490–1495.

